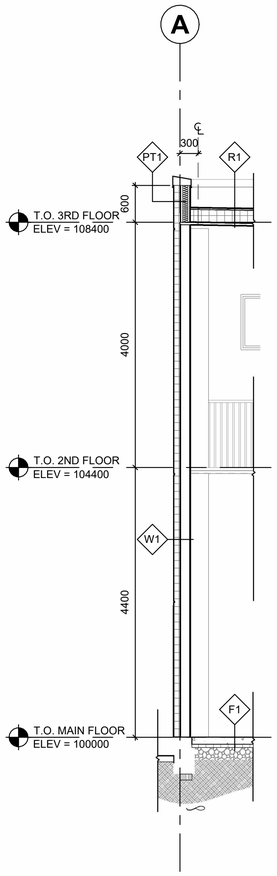

1 A3.3 **WALL SECTION**
SCALE = 1 : 50

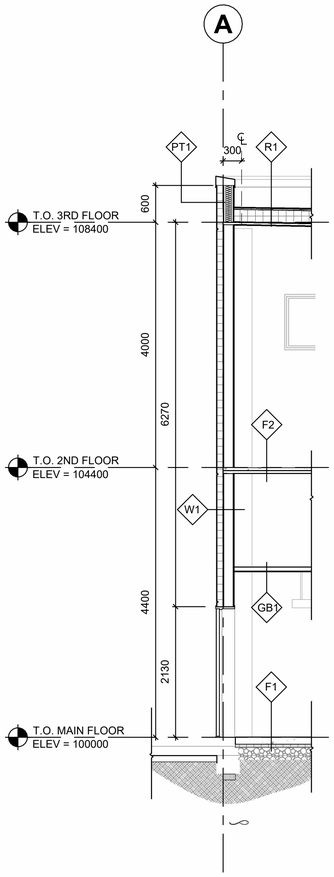

2 A2.1 **WALL SECTION**
SCALE = 1 : 50

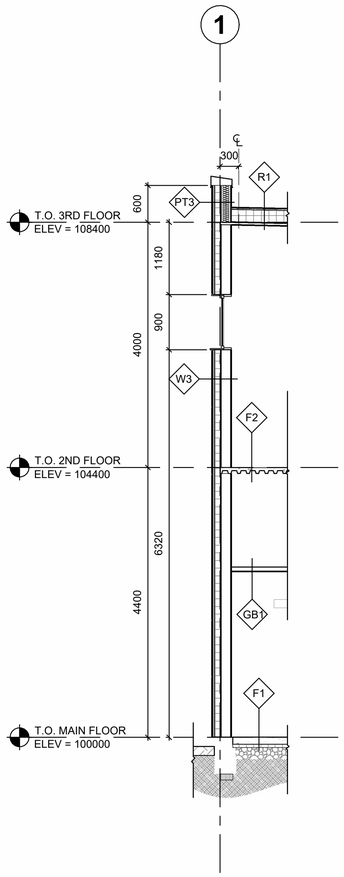

3 A3.4 **WALL SECTION**
SCALE = 1 : 50

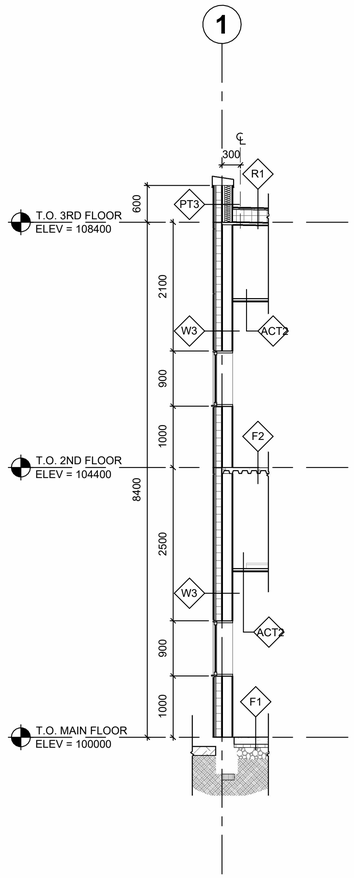

4 A3.4 **WALL SECTION**
SCALE = 1 : 50

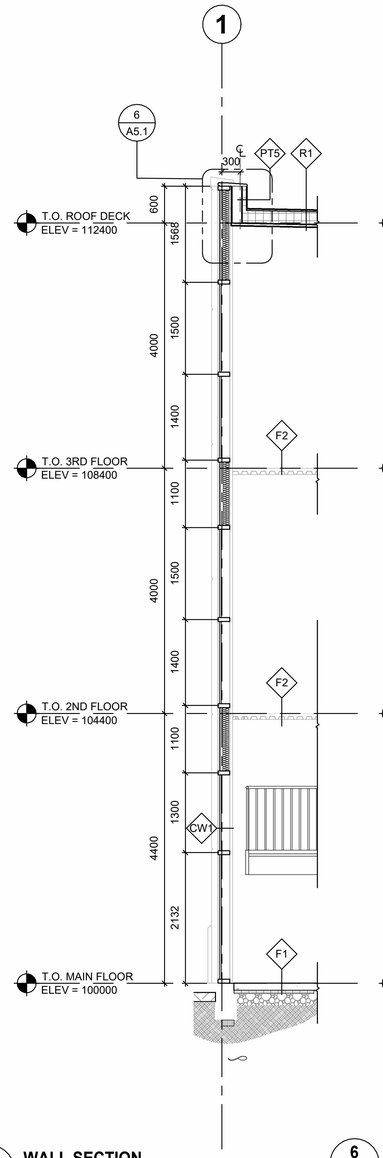

5 A3.4 **WALL SECTION**
SCALE = 1 : 50

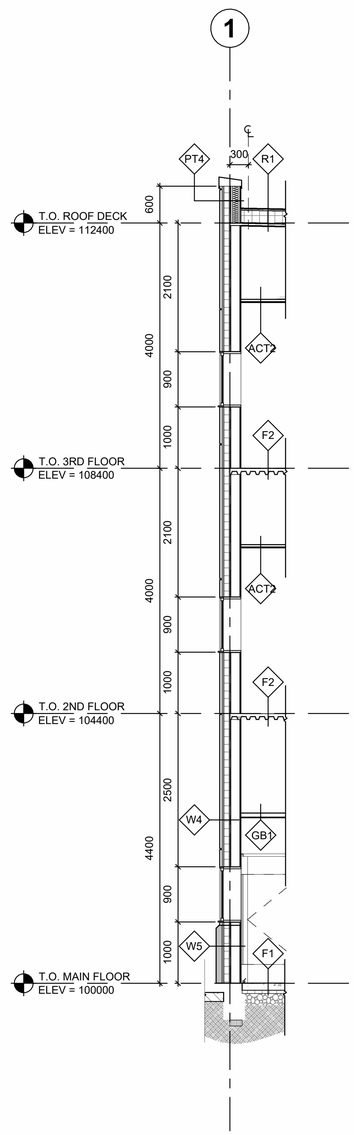

6 A3.4 **WALL SECTION**
SCALE = 1 : 50

NAIT

SCHOOL OF CONSTRUCTION AND APPLIED BUILDING SCIENCE

ARCHITECTURAL TECHNOLOGY

No.	Description	Date

NAIT AMBULANCE HEADQUARTERS

WALL SECTIONS

Class Number	A03
Date	23/03/2026
Drawn by	CHIDERA UZO
Instructor	ANDRE LUCENA

A4.1

Scale 1 : 50

C:\SCHOOL\PORTFOLIO\PORTFOLIO AMBULANCE STATION (2).rvt